PARTS LIST

MODEL	S-2379 ALARM
EFFECTIVE DATE	APRIL 15, 1976

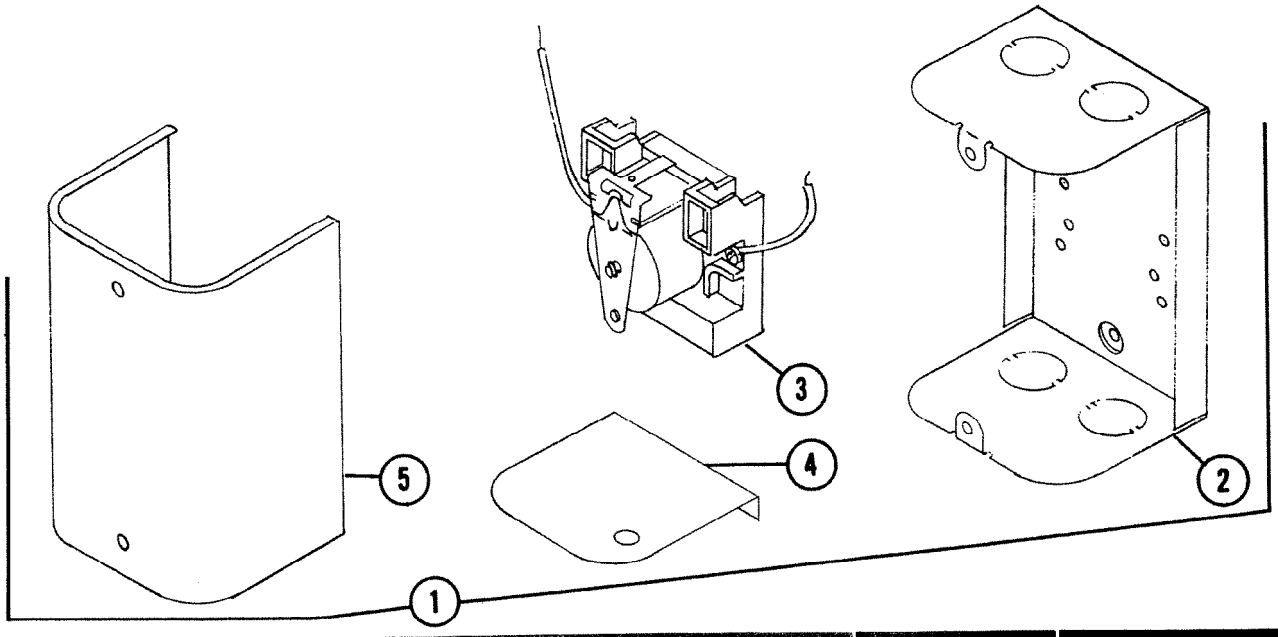

REF.	ORIGINAL PART NO.	* PART DESCRIPTION	MODEL USED ON	CURRENT REPLACEMENT PART NO.
1	10905-900	Auxiliary Relay Comp.	S-2379	10905-900
2	38710	Dust Cover Base	S-2379	38710-000
3	39542	Relay	S-2379	39542-000
4	38711	Plate - Barrier	S-2379	38711-000
5	2362A	Dust Cover	S-2379	2362A-000

NuTone Division

Order Parts From:
Parts Department c/o NuTone
P.O. Box 27 • Cincinnati, Ohio 45227

NOTE: Always order by current part number.

PRINTED IN U.S.A.

C.P. S-2379 ALARM