PARTS LIST

MODEL	S-2282 ALARM
EFFECTIVE DATE	APRIL 15, 1976

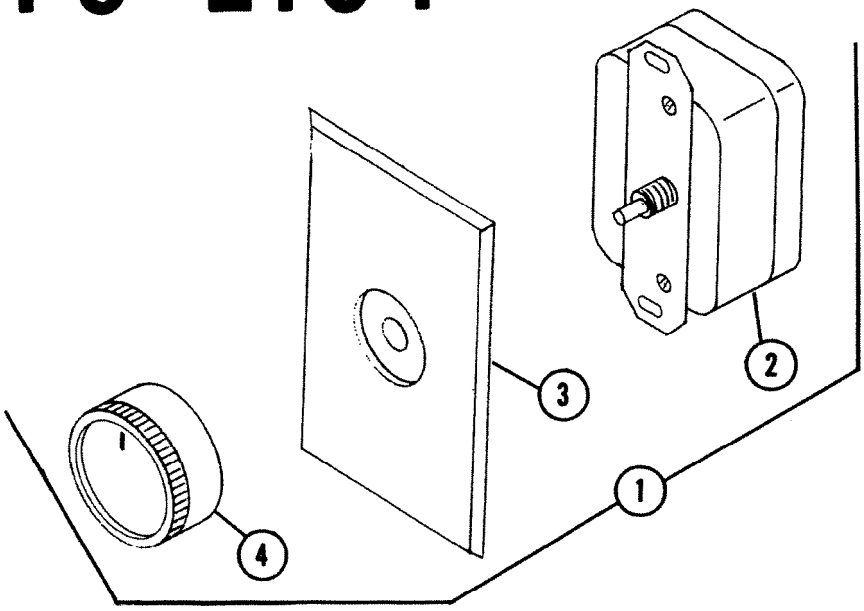

REF.	ORIGINAL PART NO.	* PART DESCRIPTION	MODEL USED ON	CURRENT REPLACEMENT PART NO.
1	10670-900	Switch Comp.	S-2282	10670-900
2	34654	Time Switch	S-2282	34654-000
3	38717	Dial Plate	S-2282	38717-000
4	39550	Knob	S-2282	39550-000

NuTone Division

Order Parts From:
Parts Department c/o NuTone
P.O. Box 27 • Cincinnati, Ohio 45227

NOTE: Always order by current part number.

PRINTED IN U.S.A.