# PARTS LIST

| EFFECTIVE DATE | MODEL | PRODUCT GROUP |
|---|---|---|
| APRIL 1985 | LK-27 NEW | BATH LIGHT |

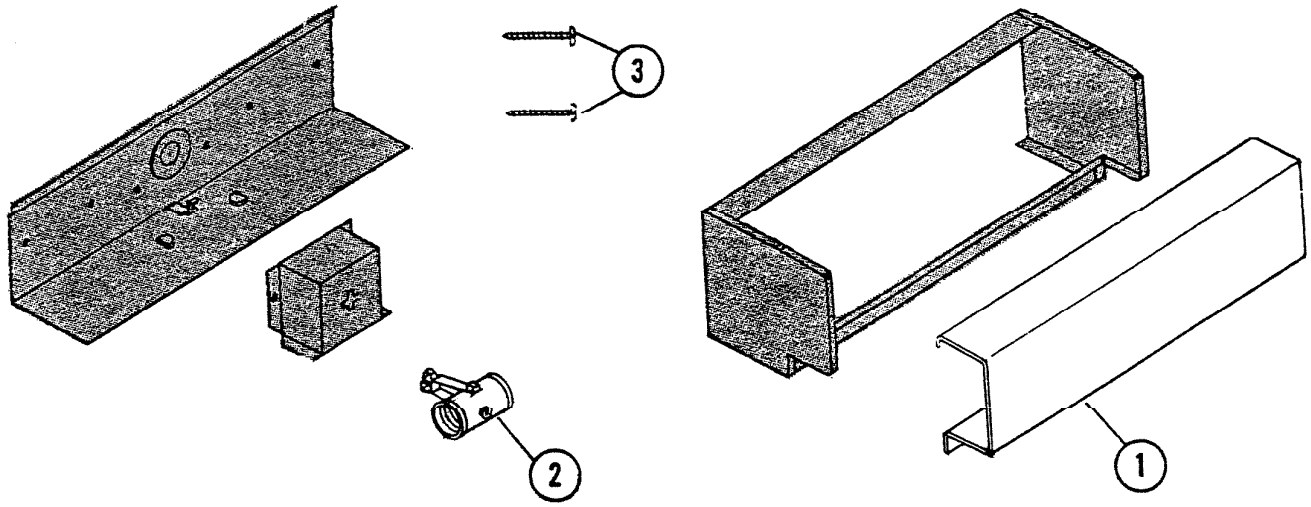


NOT A PARTS DEPT. STOCK ITEM

| REF | ORIGINAL PART NO | PART DESCRIPTION | MODEL USED ON | CURRENT REPLACEMENT PART NO |
|---|---|---|---|---|
| 1 | 95664 | LENS | LK-27 | 95664-000 |
| 2 | 90994 | SOCKET | LK-27 | 90994-000 |
| 3 | 95144 | HARDWARE SET (MOUNTING SCREWS) | LK-27 | 95144-000 |

NuTone

NOTE: Always order by current part number