PARTS LIST

EFFECTIVE DATE	MODEL	PRODUCT GROUP
JANUARY 1985	HS-94 NEW	HEATER

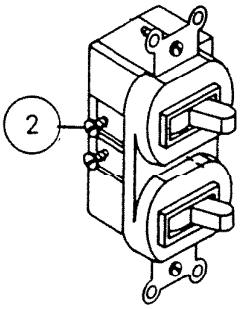

* COMBINATION SP 10A 125V T 5A 250V

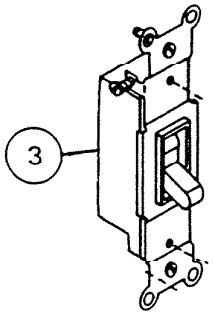

* SP 15A 120VAC

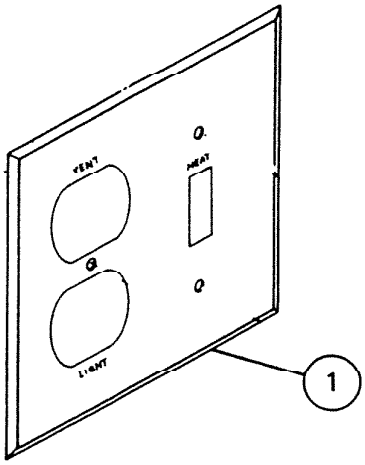

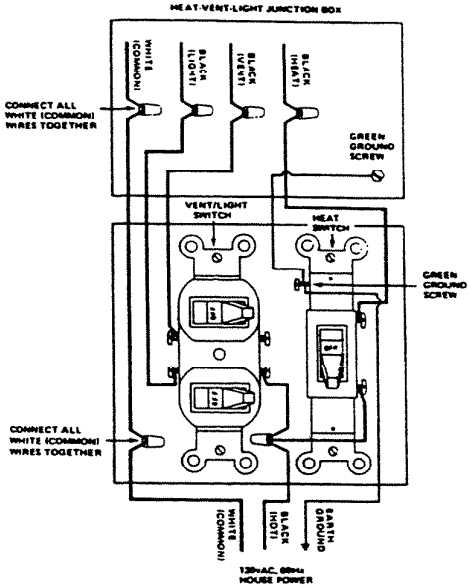

* MAY BE PURCHASED LOCALLY

REF.	ORIGINAL PART NO.	* PART DESCRIPTION	MODEL USED ON	CURRENT REPLACEMENT PART NO.
1	57318	WALL PLATE	HS-94	57318-000
2	57316	VENT/LIGHT SWITCH	HS-94	57316-000
3	57317	HEAT SWITCH	HS-94	57317-000
	68020	MOUNTING SCREW (NOT SHOWN)	HS-94	68020-001

NuTone
Housing Group Scovill

PRINTED IN U.S.A.

NOTE: Always order by current part number.