PARTS LIST

EFFECTIVE DATE	MODEL	PRODUCT GROUP
APR. 1992	9515 9515X NEW	HEATER

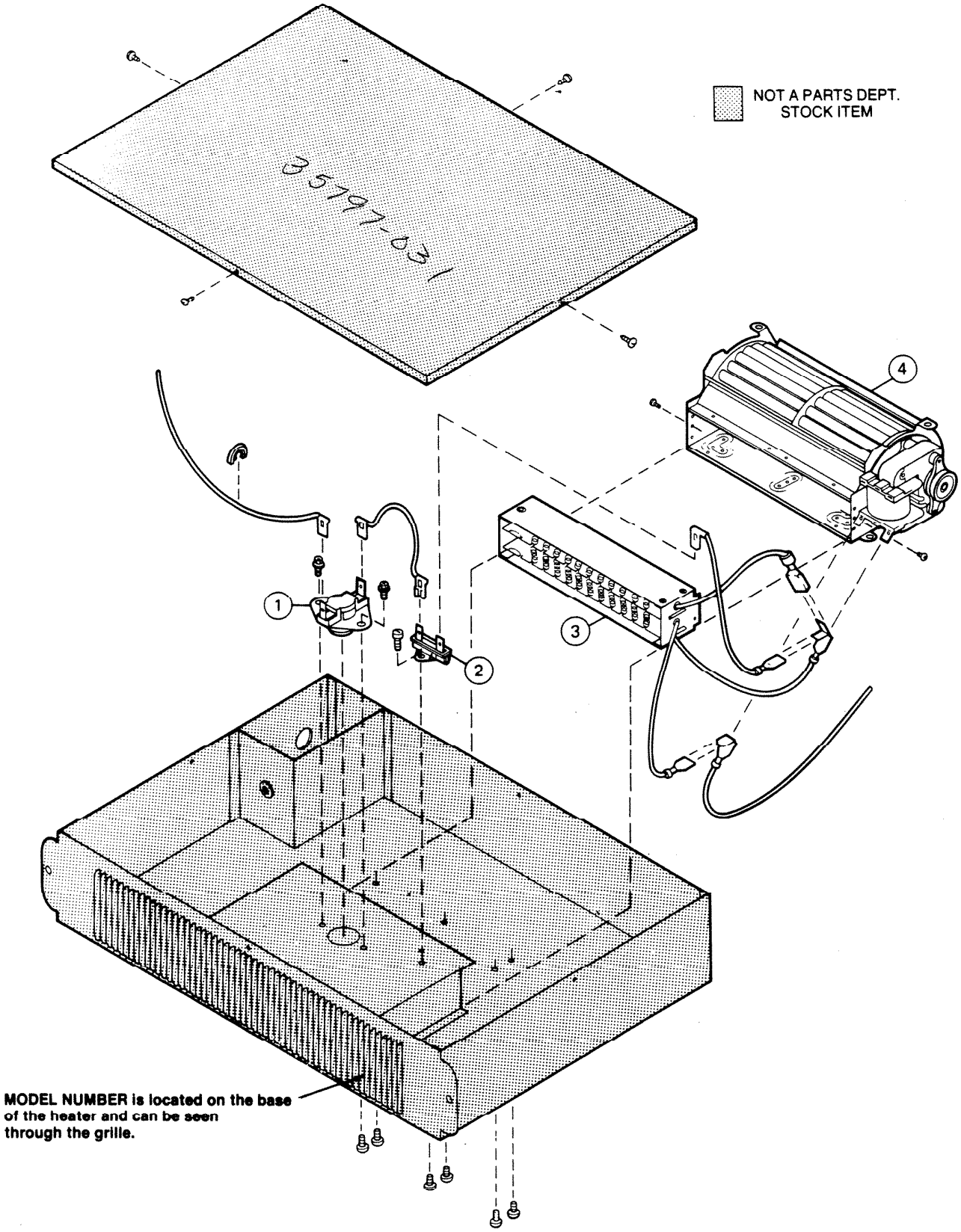

REF.	ORIGINAL PART NO.	*PART DESCRIPTION	MODEL USED ON	CURRENT REPLACEMENT PART NO.
1	57273	THERMAL PROTECTOR	All Models	57273-000
2	35841	THERMAL FUSE		35841-000
3	35838	HEAT ELEMENT ASSEMBLY	9515	35838-000
	35839		9515X	35839-000
4	33178	BLOWER & MOTOR ASSEMBLY	9515	33178-000
	33180		9515X	33180-000

NOTE: Always order by current part number.

9515 (120 Volt)
WIRING DIAGRAM

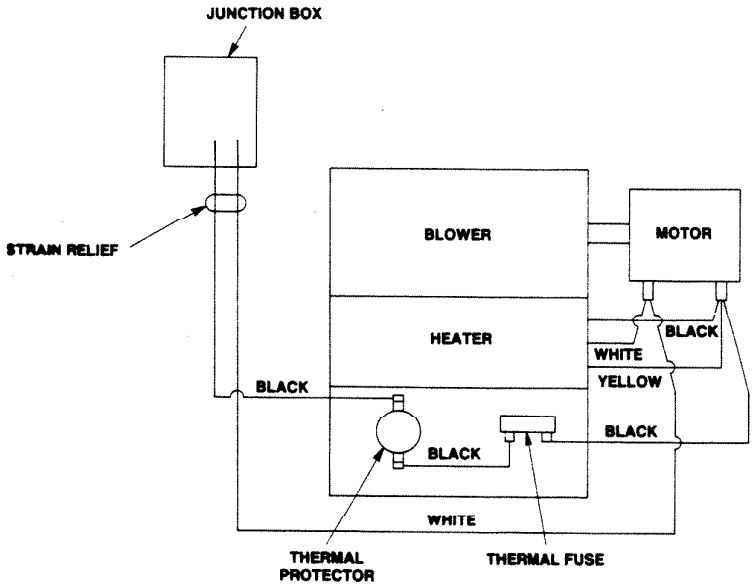
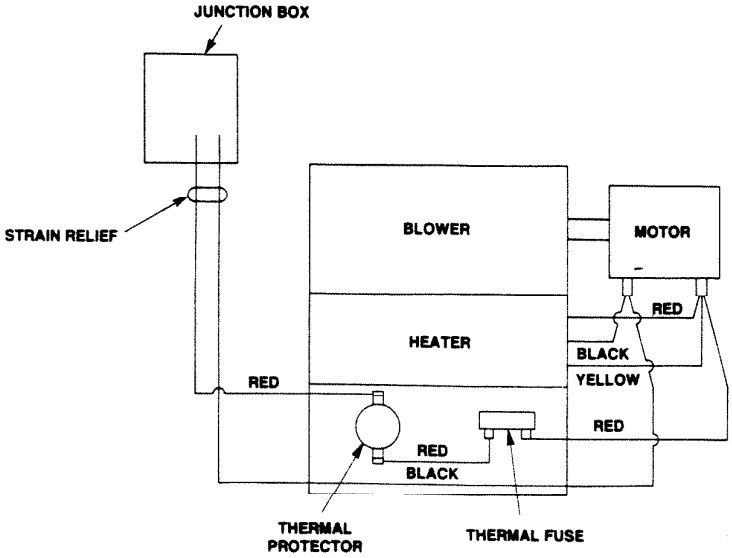
9515X (240 Volt)
WIRING DIAGRAM