PARTS LIST

EFFECTIVE DATE	MODEL	PRODUCT GROUP
APRIL 1978	733, 734 NEW	BATH CABINET

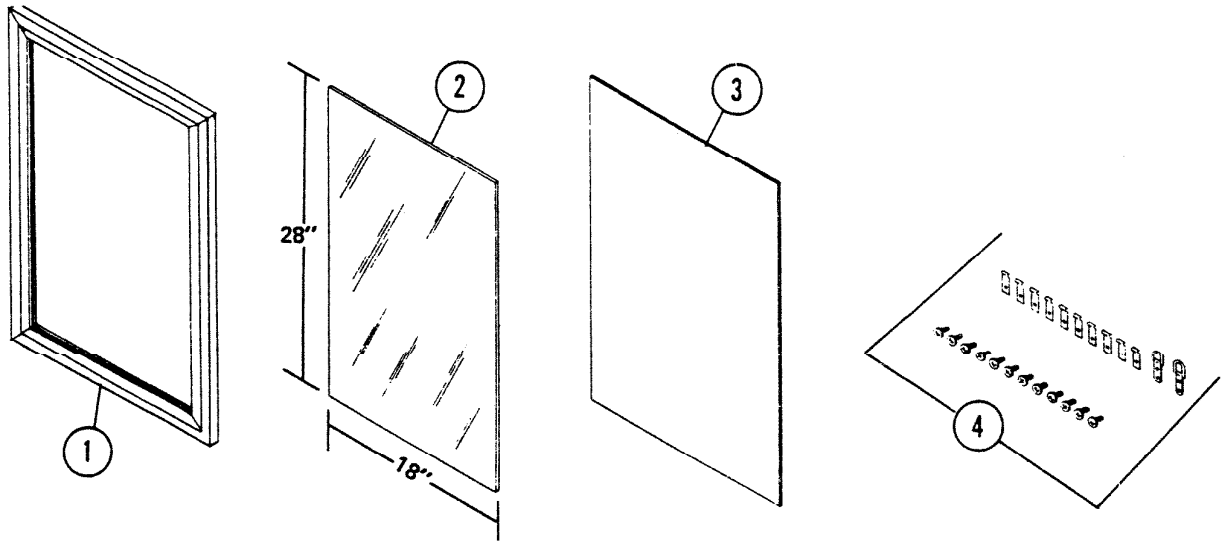

REF.	ORIGINAL PART NO.	* PART DESCRIPTION		MODEL USED ON	CURRENT REPLACEMENT PART NO.
1	94296-000	FRAME	GOLD	733	**94296-000**
	94297-000		SILVER	734	**94297-000**
2	94201-000	MIRROR Note: Mirror may be purchased from local Glass Shop Size 1/4"X18"X28"		733	**94201-000**
				734	
3	94303-000	BACKING		733 – 734	**94303-000**
4	91364-000	MIRROR HANGER KIT		733 – 734	**69791-000**

NuTone Division

NOTE: Always order by current part number.