PARTS LIST

EFFECTIVE DATE	MODEL	PRODUCT GROUP
MARCH 1982	276 NEW	FOOD CENTER

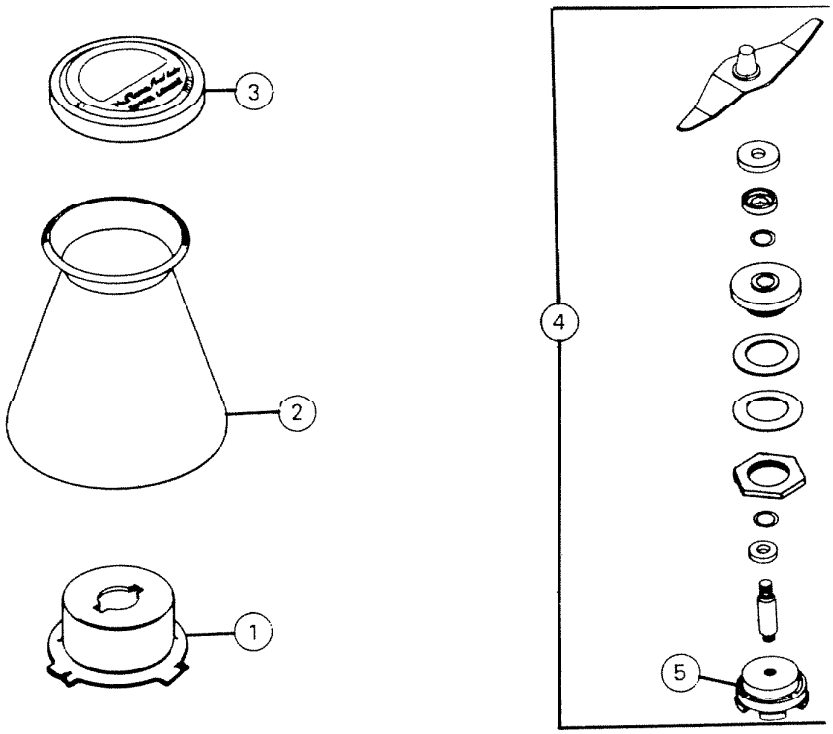

REF.	ORIGINAL PART NO.	* PART DESCRIPTION	MODEL USED ON	CURRENT REPLACEMENT PART NO.
1	52651	BOWL BASE	276	52651-018
2	52649	GRINDER BOWL	276	52649-008
3	52657	LID	276	52657-000
4	2725A	DRIVE SHAFT ASSY.	276	2725A-000
5	64703	DRIVE ASSY.	276	64703-000

NuTone
Housing Group Scovill
PRINTED IN U.S.A.

NOTE: Always order by current part number